90061-XH Series

WELD PROBE FORCE AUDITING SYSTEM

This system is ideal for field measurement and data logging of forces between the tips of resistance spot welders. The system consists of a handheld sensor and portable readout/ datalogger (PMAC 2000). The sensor head, mounted on the end of the handle is positioned between the electrodes of a resistance type welder and senses the force when the closing mechanism is activated. The peak reading is then stored on the handheld instrument (PMAC 2000), and up to 8000 readings can be stored in memory. These readings can then be viewed by scrolling through the menu, or downloaded to a computer or printer via RS232 output. The instrument can also be used in a tracking mode and a scope mode. In the scope mode, data points in a force vs. time curve can be stored. The meter can sample at a rate of 10 kHz. Then these data points can be downloaded to a plot program where the actual force vs. time can be displayed and evaluated. It is recommended that the weld current be deactivated while using the sensor. However, if accidently left on, no damage to the sensor will occur.

MODEL	CAPACITY (LBS.)	A	B	C	D
90061-BHOO	1,000	1.75	.25	.90	.90
90061-AHOO	3,000		.50		
90061-CHOO	5,000	2.75	1.10	1.00	1.00
90061-DHOO	10,000				

PMAC 2000 SPECIFICATIONS

Accuracy..... 0.05% of F.S.
Sampling rates
Peak and track functions..... 5 kHz
Scope functions..... Selectable up to 10 kHz
Frequency response..... (-3dB) at 1000 Hz
Maximum input..... 4.5 mV/V
Polarity..... Bi-polar
Excitation..... 7 volts
Minimum bridge impedance..... 120 Ohms
Data output..... RS232, 9600 baud, 8-N-1
Analog output..... 0-1 V dc at 2 mV/V
Power Internal.....9.6 V dc rechargeable
(115 V ac charger included)

SPECIFICATIONS
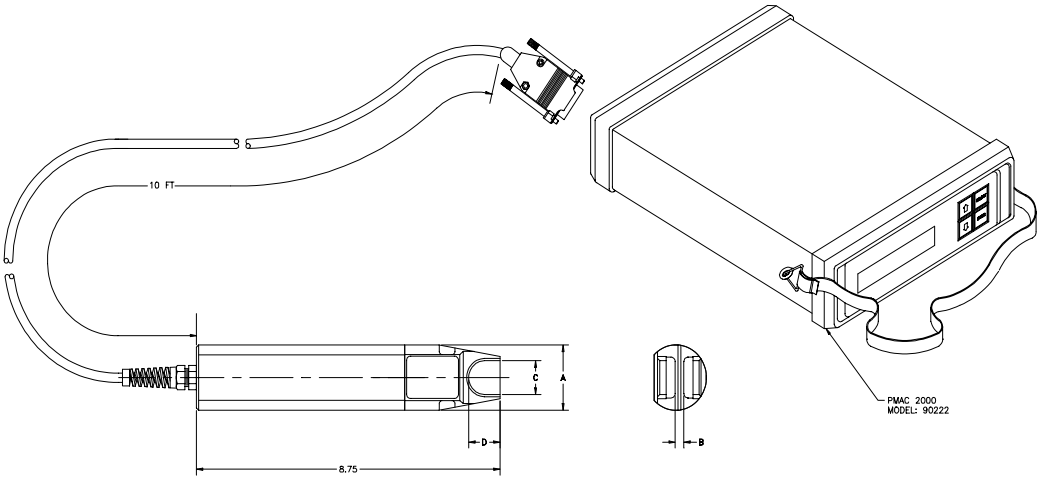
Capacities..... 300 - 10000 lbs.
Accuracy..... 0.5% of F.S.
Overload capacity.....150% of F.S.
Handle assembly weight.....2 lbs.
Handle dimensions.....2" dia. x 8" long
Handle material.....Urethane