DURAKOOL Series 2030 30 Amps

2 POLE

These Durakool 2 pole (2030) and 3 pole (3030) contactors (normally open), are designed for resistive loads typically found in heating and processing equipment such as ovens, fryers, and dishwashers. They feature quiet operation and rapid on/off cycling. They are a practical replacement for mechanical contactors, providing a long service life and reliable operation even in hostile environments. They will fit in the same space as most mechanical contactors. Easy to install, the 2030/3030 contactors have a standard DP mounting footprint. The terminal screws all face forward for easy connection of leads to contacts.

SPECIFICATIONS

Maximum Time:	Operate	Release
	50 ms, Max.	70 ms, Max.
Contact Bounce, Release:	None	
Recommended DC Load Polarity:	Top Connection Negative	
Breakdown Voltage: Contact to Ground:	5000 VRMS/Min.	
Weight:	2.0 lbs.	

TYPE/SERIES		30 Amps				
DESCRIPTION		Part Number	Typical Coil Data DC Ohms	Watts	Amps	V.A.
	Volts					
2 POLE Normally Open	24	2030APS24AC	20	4.52	0.456	10.94
	120	2030APS120AC	340	6.45	0.121	14.52
	208	2030APS208AC	1251	5.48	0.055	11.44
	240	2030APS240AC	1420	6.68	0.059	14.16
	480	2030APS480AC	5700	6.80	0.028	13.44
	12 (DC)	2030APS12DC	24.5	5.80	0.489	5.87
	24 (DC)	2030APS24DC	96	5.80	0.240	5.76

ELECTRICAL RATINGS		RESISTIVE LOAD 60 Hz Amps						DC Amps	Tungsten 120
SERIES	Volts	120	208	240	277	480	600	1-48	60 Hz
2030, 3030		30	30	30	30	30	30	30	25

DURAKOOL Series 2030 30 Amps
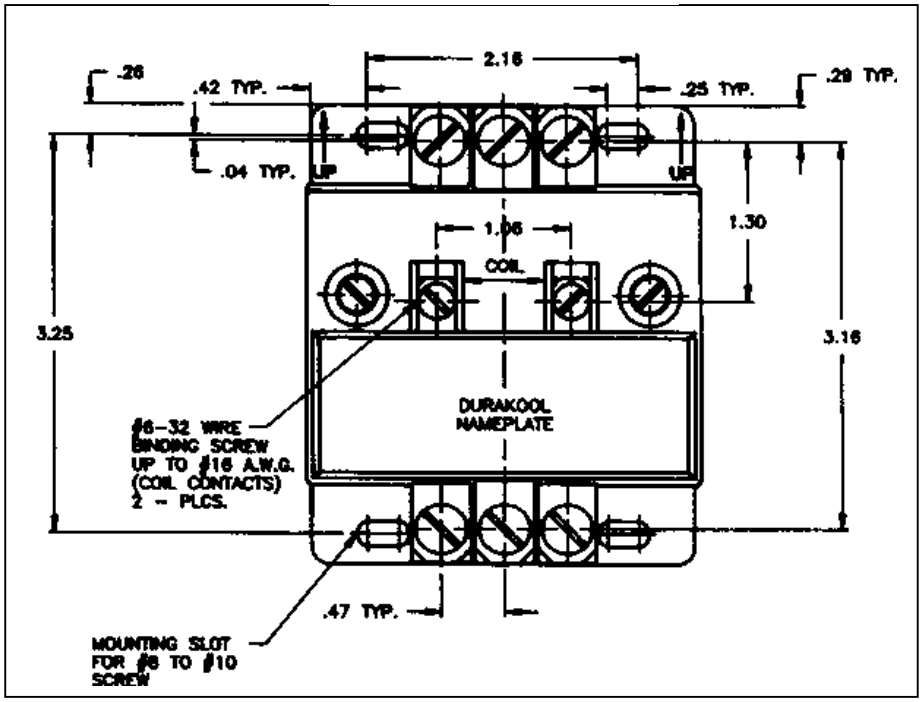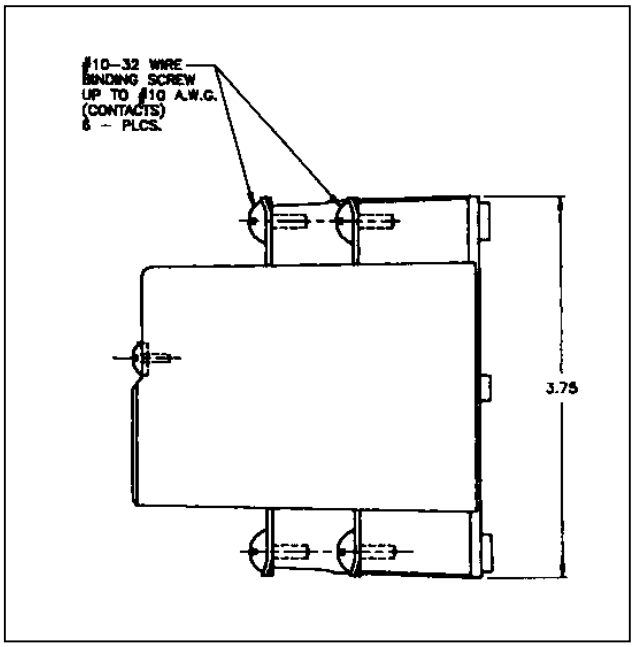
2 POLE